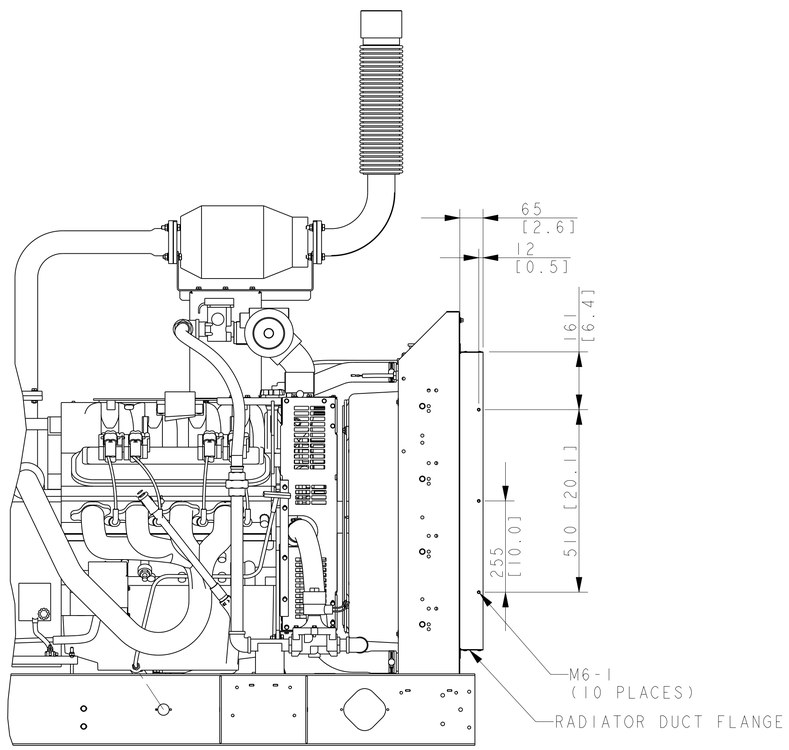

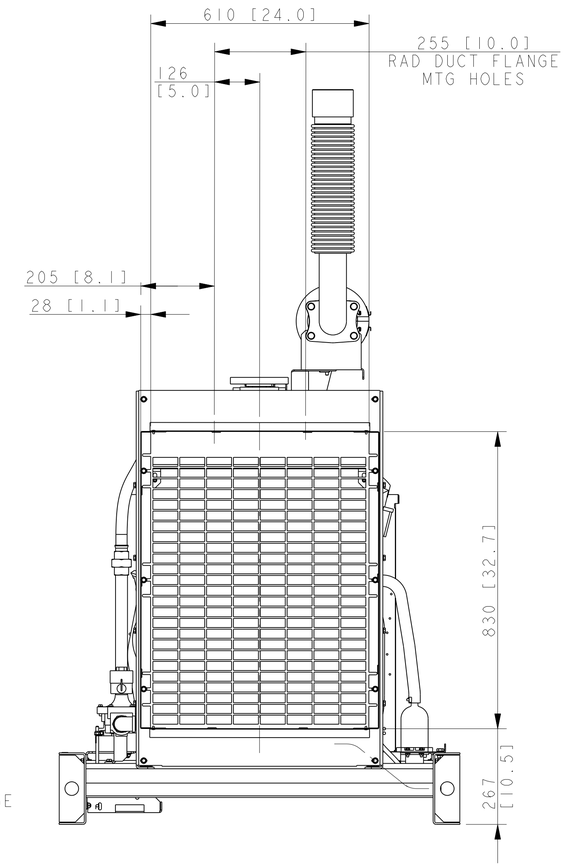

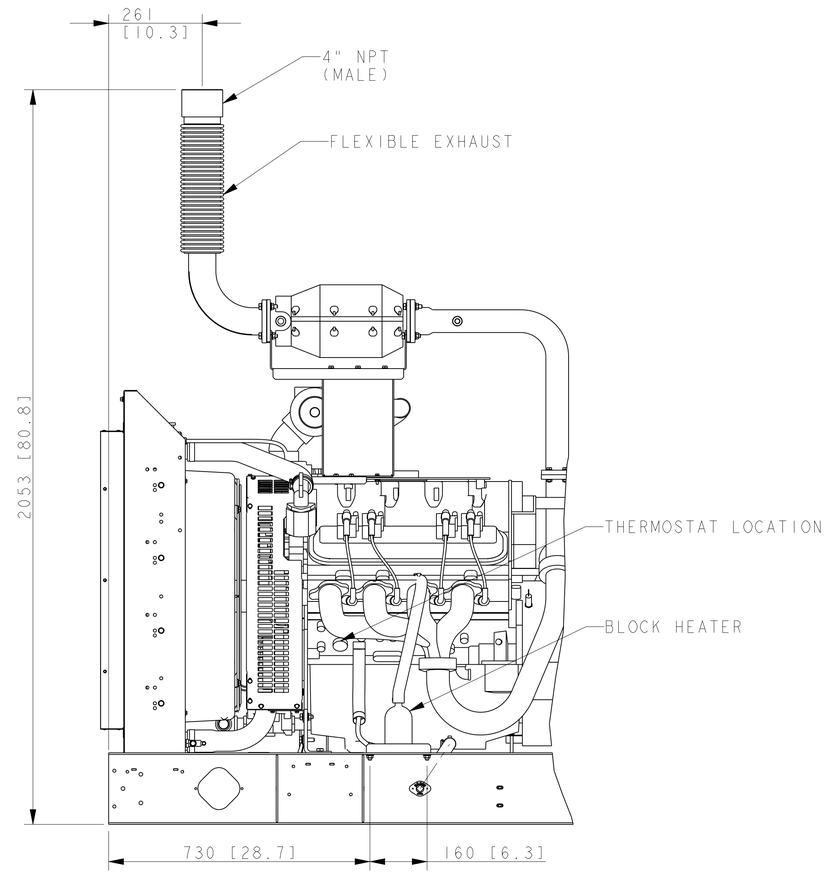

DIMENSIONS IN [ ] ARE
ENGLISH STANDARD EQUIVALENTS

80 MODEL 4S7/4V9
100 MODEL, 4S9/4S13/4V11
RECONNECTABLE,
IMPROVED MOTOR STARTING (IMS) RECONNECTABLE
& 600V ALTERNATORS
8.1 LITER GM 2009 EMISSIONS

REV	DATE	ON COMPOSITE DWGS, SEE PART NO. FOR REVISION LEVEL	BY
-	3-27-09	NEW DRAWING [87436-1]	DJG

UNLESS OTHERWISE SPECIFIED: -
1) DIMENSIONS ARE IN MILLIMETERS
2) TOLERANCES ARE:

SURFACE FINISH MAX.

THIRD ANGLE PROJECTION

APPROVALS		DATE
DRAWN	DJG	3-27-09
CHECKED	CWF	3-27-09
APPROVED	JAS	3-27-09

KOHLER CO. METRIC | PRO-E

POWER SYSTEMS, KOHLER, WI 53044 U.S.A.

THIS DRAWING IN DESIGN AND DETAIL IS KOHLER CO. PROPERTY AND MUST NOT BE USED EXCEPT IN CONNECTION WITH KOHLER CO. WORK. ALL RIGHTS OF DESIGN OR INVENTION ARE RESERVED.

TITLE
DIMENSION PRINT
80/100 MODEL, ACCESSORIES

SCALE 0.12 | CAD NO. | SHEET 1 of 1

DWG NO. ADV-7654 | D