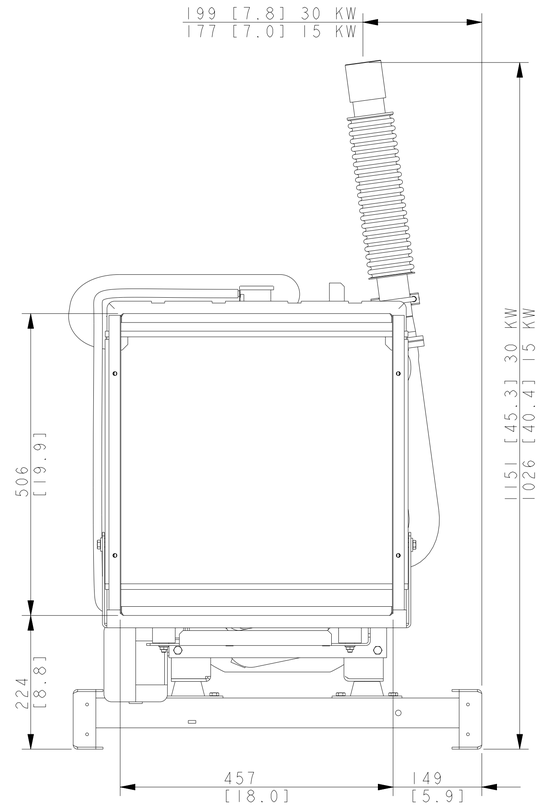

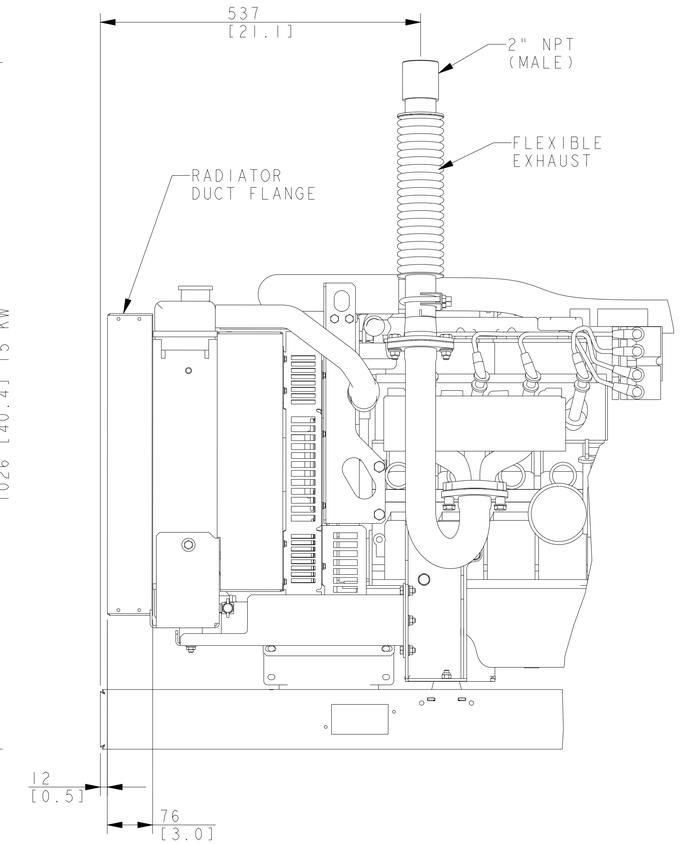

FLEXIBLE EXHAUST &
RADIATOR DUCT FLANGE

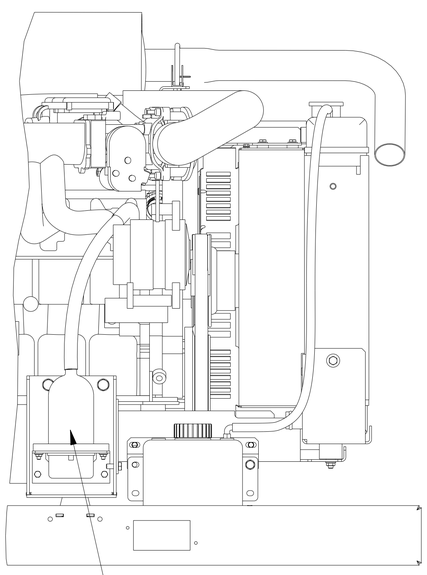

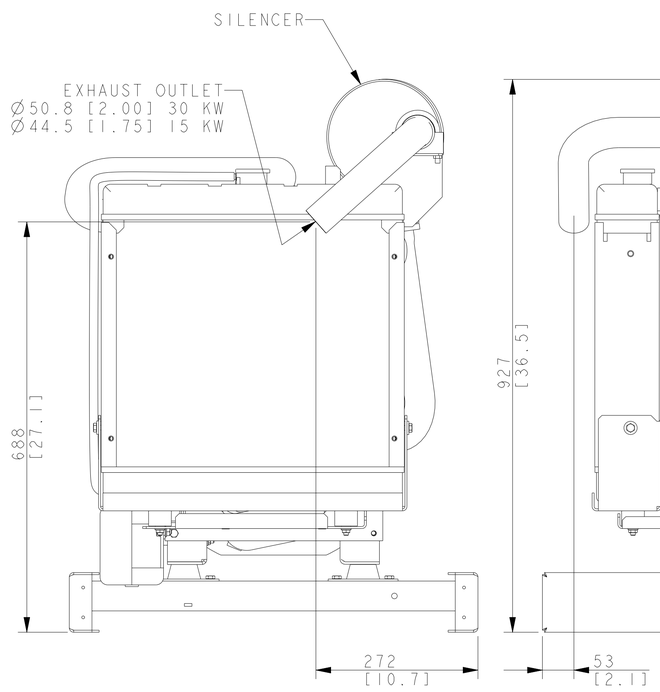

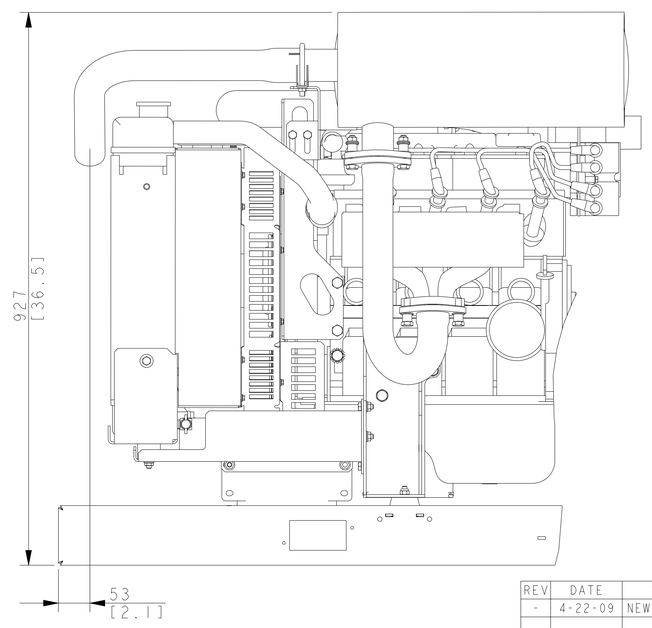

ENGINE MOUNTED SILENCER
& BLOCK HEATER

NOTE
DIMENSIONS IN [] ARE INCH EQUIVALENTS.

15/30 KW GM1.6L
ACCESSORIES

REV	DATE	ON COMPOSITE DWGS, SEE PART NO. FOR REVISION LEVEL	BY
-	4-22-09	NEW DRAWING [87252-5]	DDH

UNLESS OTHERWISE SPECIFIED -
1) DIMENSIONS ARE IN MILLIMETERS
2) TOLERANCES ARE:
X.XX ±
X.X ±
X ±
ANGLES ±
SURFACE FINISH
MAX.
THIRD ANGLE PROJECTION

APPROVALS		DATE
DRAWN	DDH	4-22-09
CHECKED	DDH	4-22-09
APPROVED	JAS	4-22-09

KOHLER CO. METRIC PRO-E
POWER SYSTEMS, KOHLER, WI 53044 U.S.A.

THIS DRAWING IN DESIGN AND DETAIL IS KOHLER CO. PROPERTY AND MUST NOT BE USED EXCEPT IN CONNECTION WITH KOHLER CO. WORK. ALL RIGHTS OF DESIGN OR INVENTION ARE RESERVED.

TITLE DIMENSION PRINT, 15/30 KW GM1.6L ACCESSORIES

SCALE 0.20 | CAD NO. | SHEET 1 of 1
DWG NO. ADV-7693 | D